Cartridge Solenoid

Model NO.: SV37-1(12VDC) CZ-CCBZ-001

Technical Parameters

Power type	DC	Rated Voltage (V)	12
Rate current (A)	1.50A	Resistance (Ω/20℃)	5±0.25
Full Stroke (mm)	2.6	Rated Force (N)	⩾50
Isolation Grade	H/180℃	Duty Time (%)	100
Oil Pressure Duration(MPa)	21	IP Grade	IP66
Max Switch Frequency (t/h)	15000	Life Cycle (t)	$10X10^6$

S—F CURVE

Testing Current: 1.50A

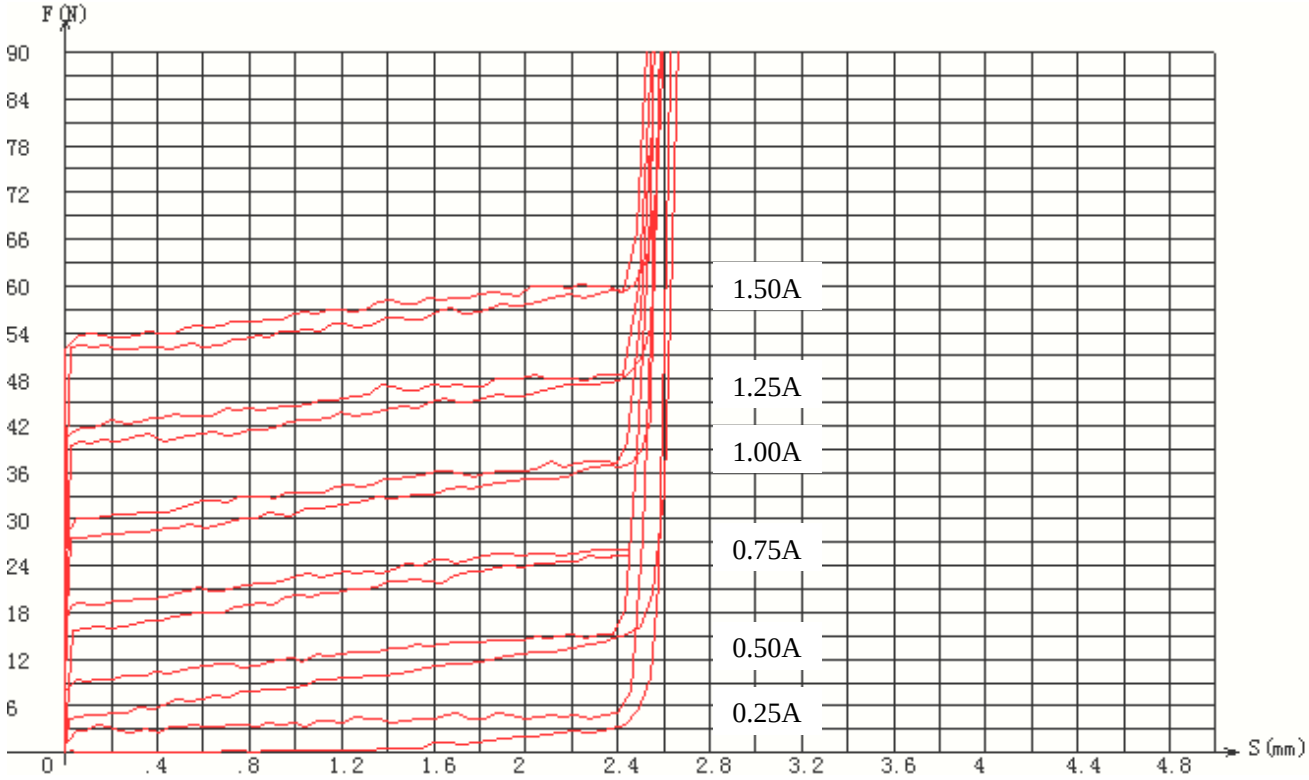
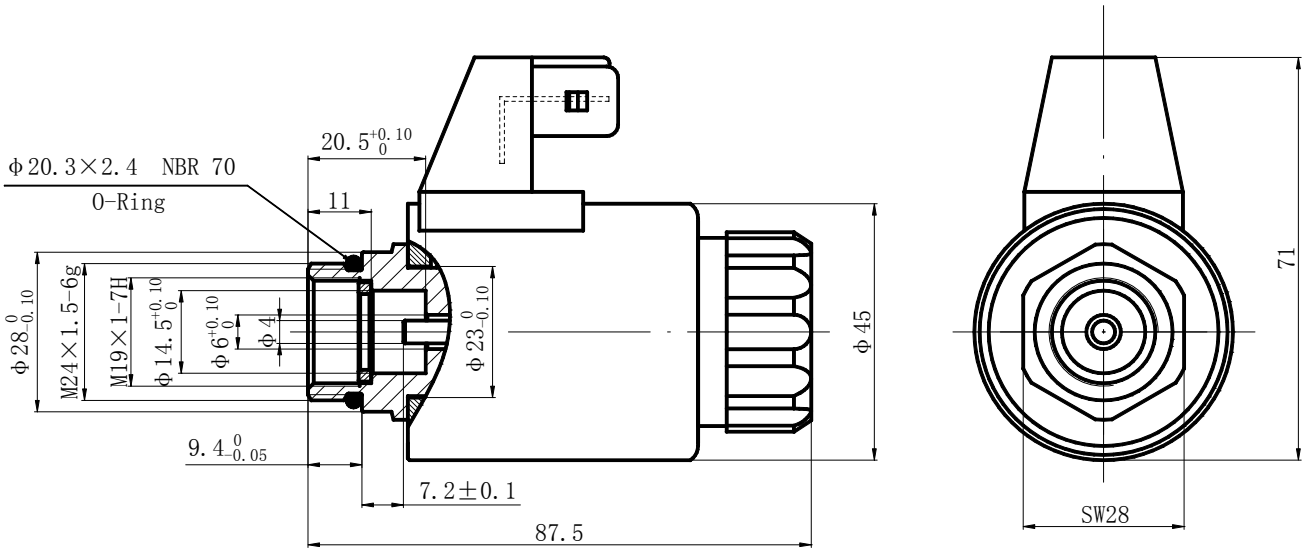
Outside shape and installation dimensions