Proportional Solenoid

Product Code: PM-H6-SC45T SM-CCBZ-182

Technical Parameters

Rated current (mA)	2.5A	Resistance (Ω/20℃)	2
Rated Force (N)	65	Repeat Accuracy (%)	≤1
Force Lag Characteristic (%)	≤4	Current Lag Characteristic (%)	≤3
Full Stroke (mm)	2.8	Rated Stroke (mm)	2.5
Oil Pressure Duration (MPa)	21	IP Grade	IP65

S—F CURVE Testing Current: 2.5A

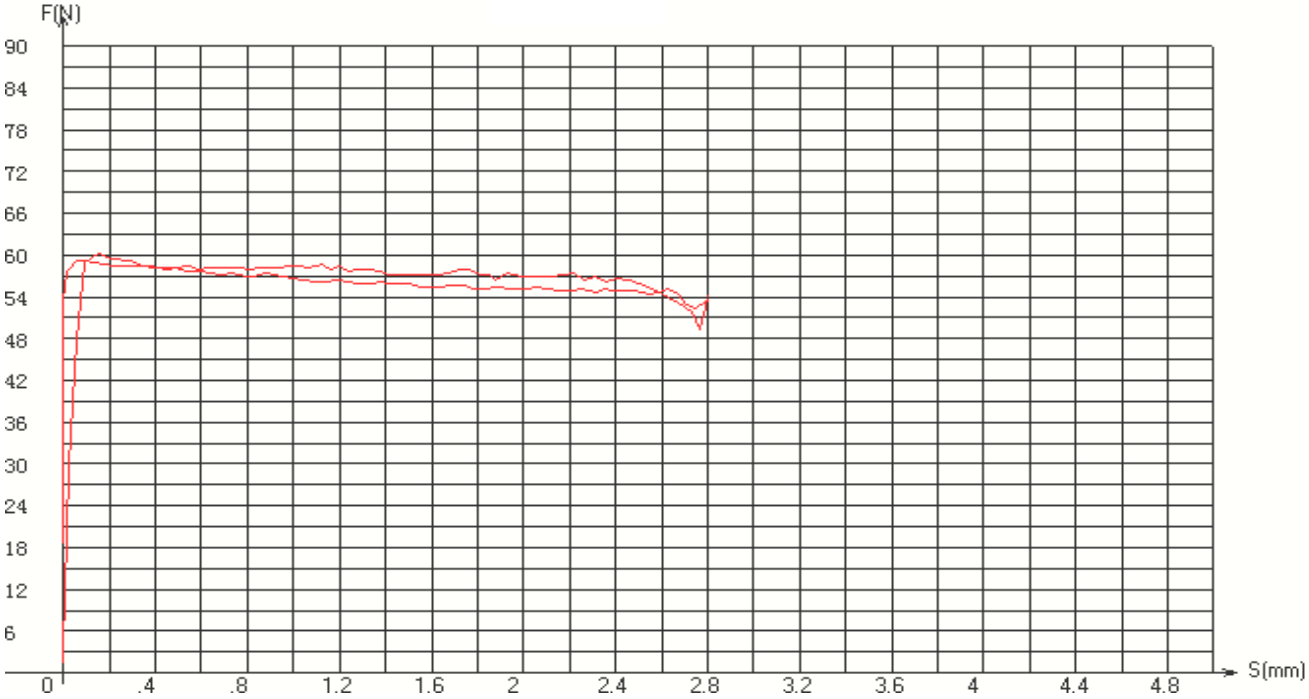
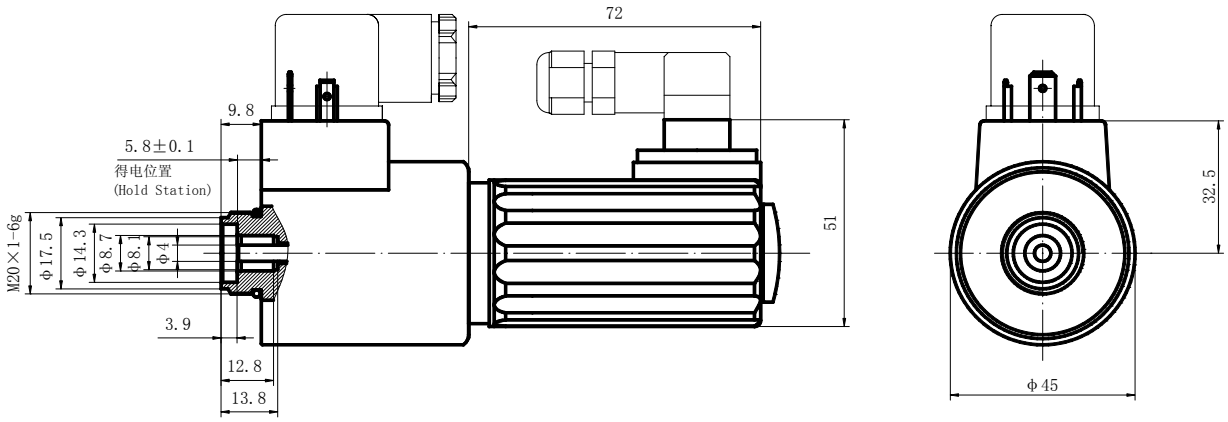
Outside shape and installation dimensions